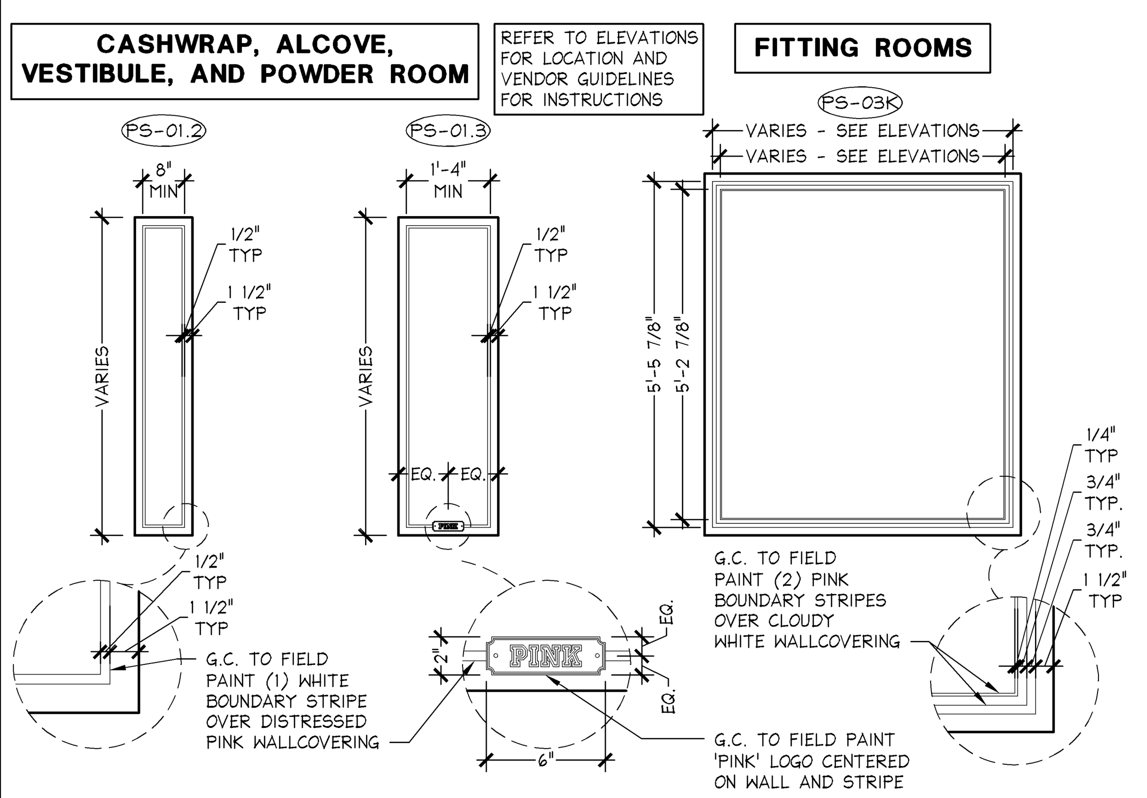

FIELD PAINTED BOUNDARY STRIPE INSTALLATION DETAILS

NO SCALE | 05N-A1009-R00-NOTE | R | 04.04.14

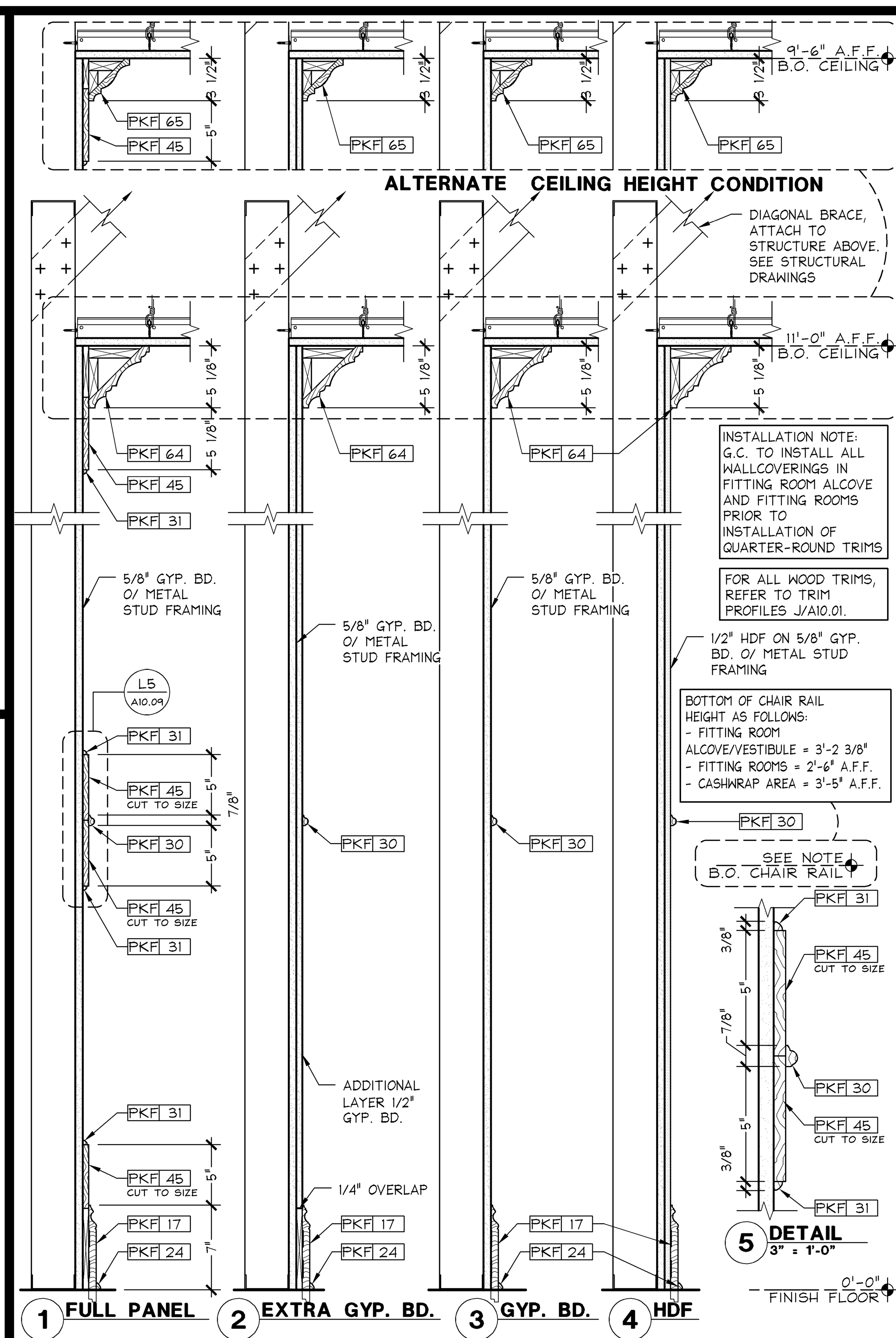

PINK FITTING ROOM WALL SECTIONS

1 1/2" = 1'-0" | 05N-A1009-L00-DETL | L | 10.28.13

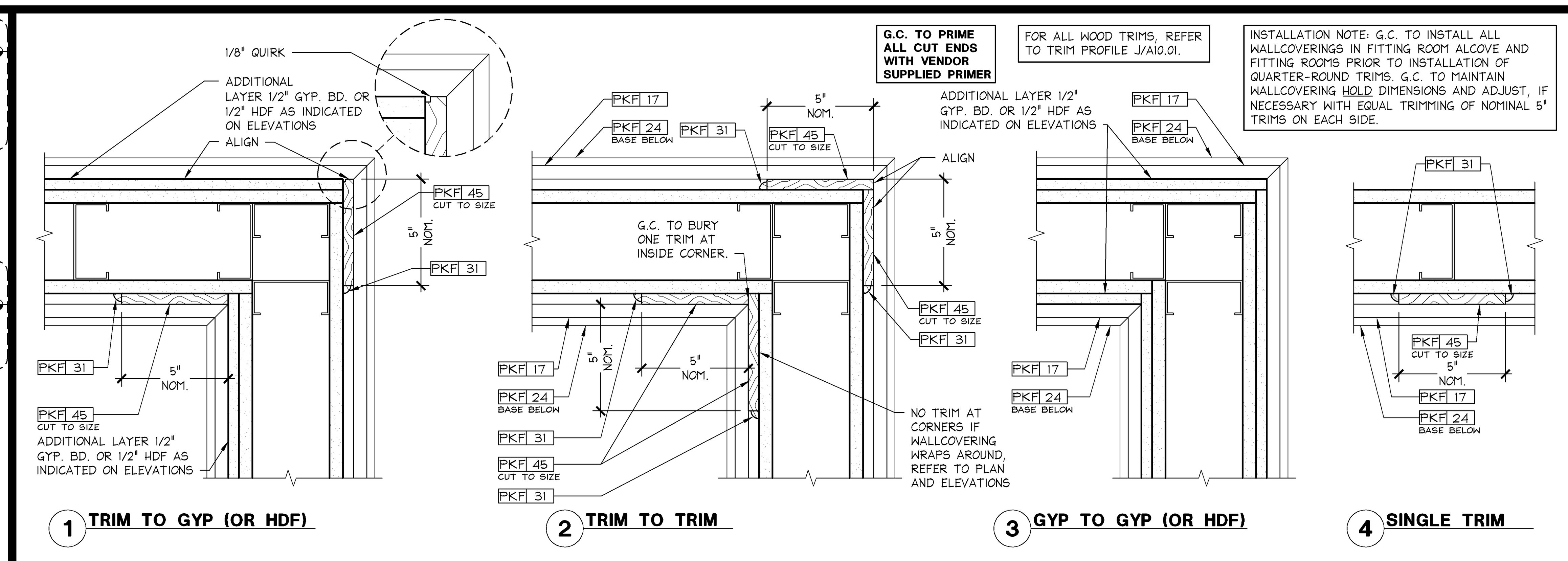

PINK CORNERS AND TRIMS PLAN DETAILS

3" = 1'-0" | 05N-A1009-D00-DETL | D | 04.04.14

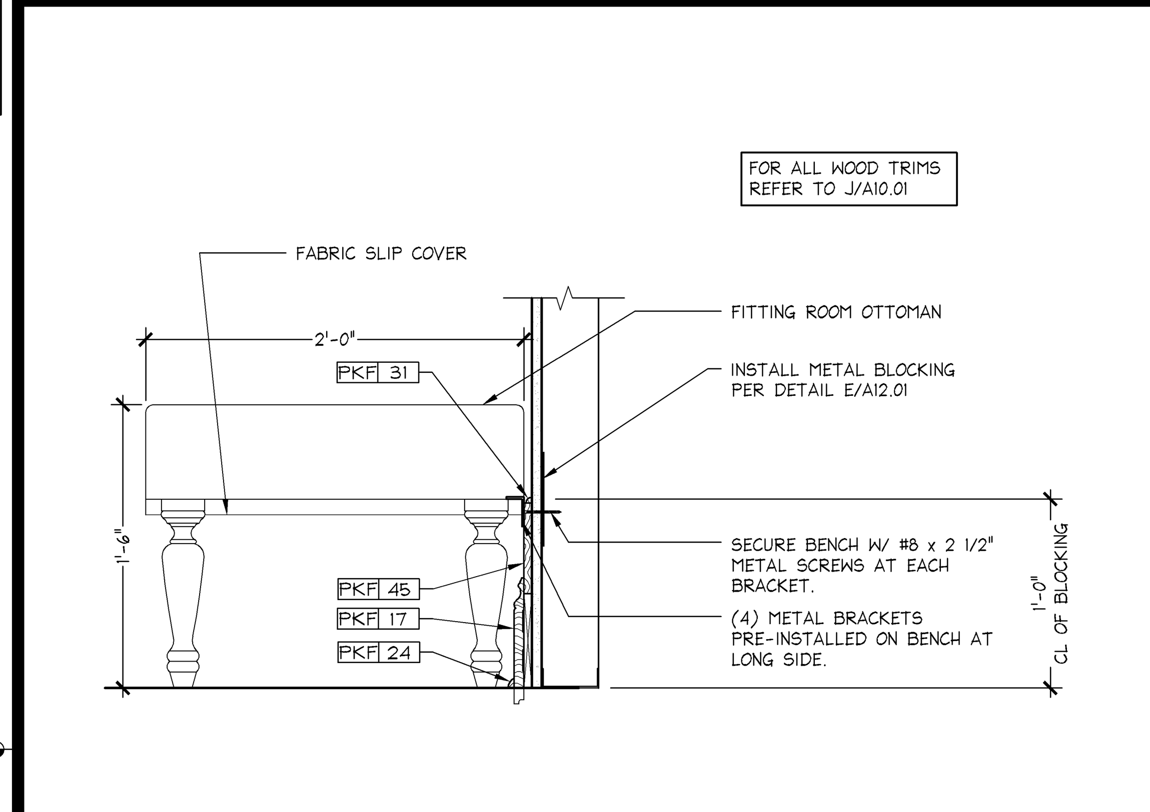

ACCESSIBLE FITTING ROOM BENCH INSTALLATION DETAIL

1 1/2" = 1'-0" | 05D-A1009-G00-DETL | G | 08.23.13

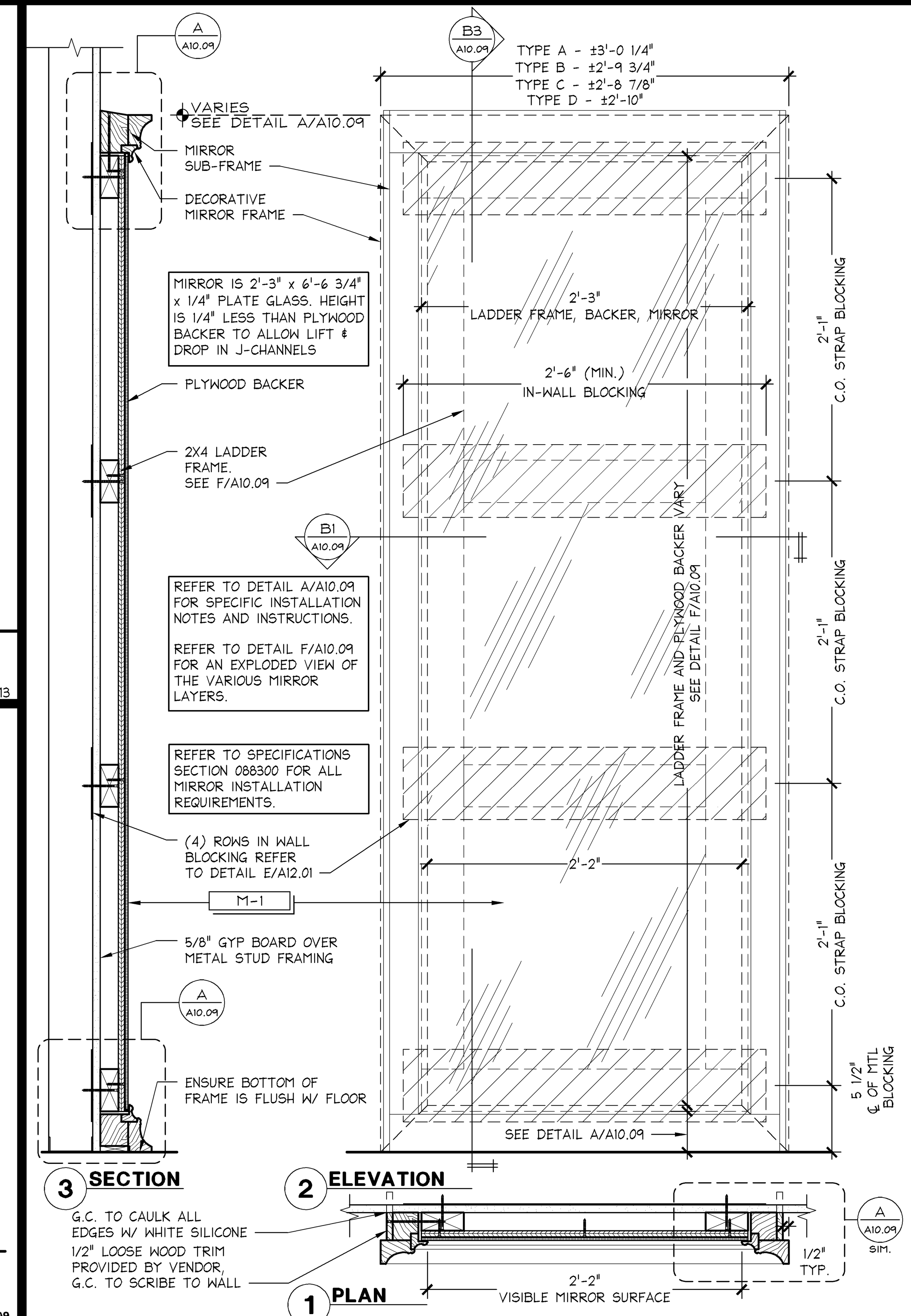

PINK FITTING ROOM MIRROR ELEVATION

1 1/2" = 1'-0" | 05D-A1009-B00-DETL | B | 12.13.13

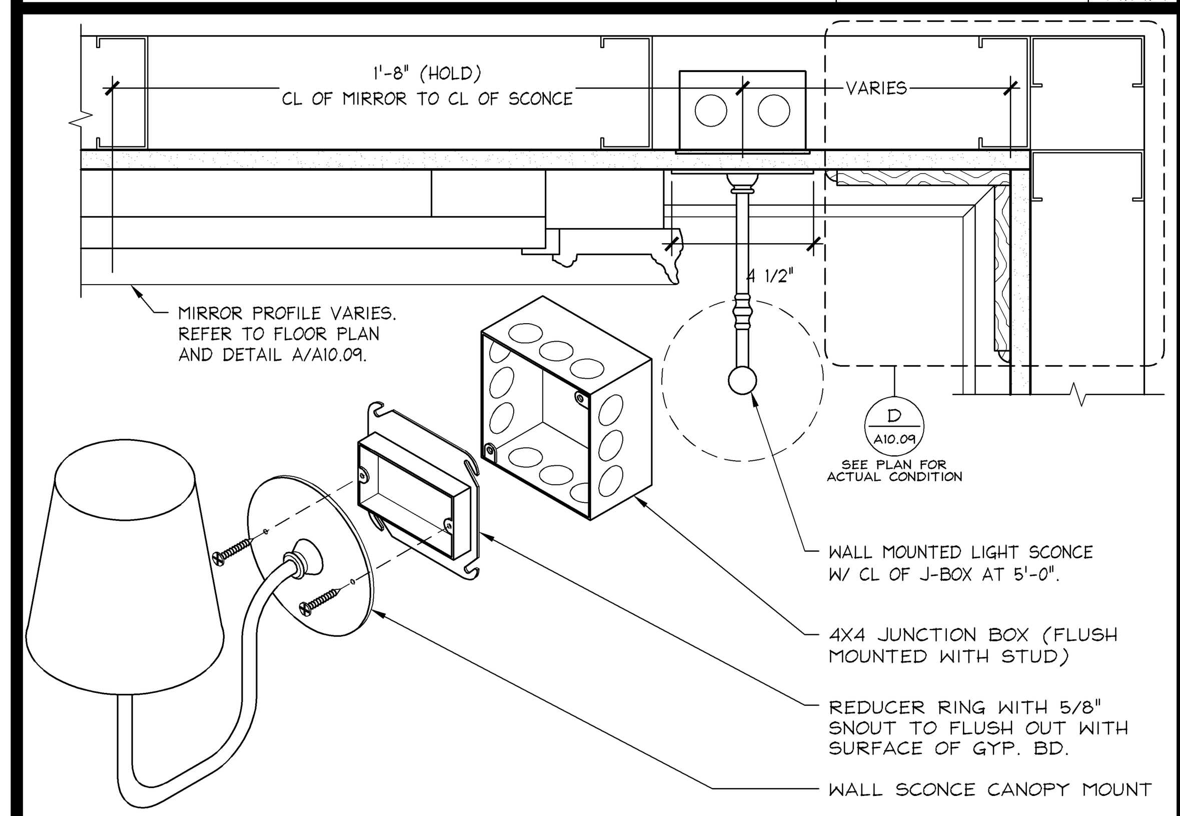

FITTING ROOM MIRROR / SCONCE MOUNTING DETAIL

3" = 1'-0" | 05D-A1009-P00-DETL | P | 08.23.13

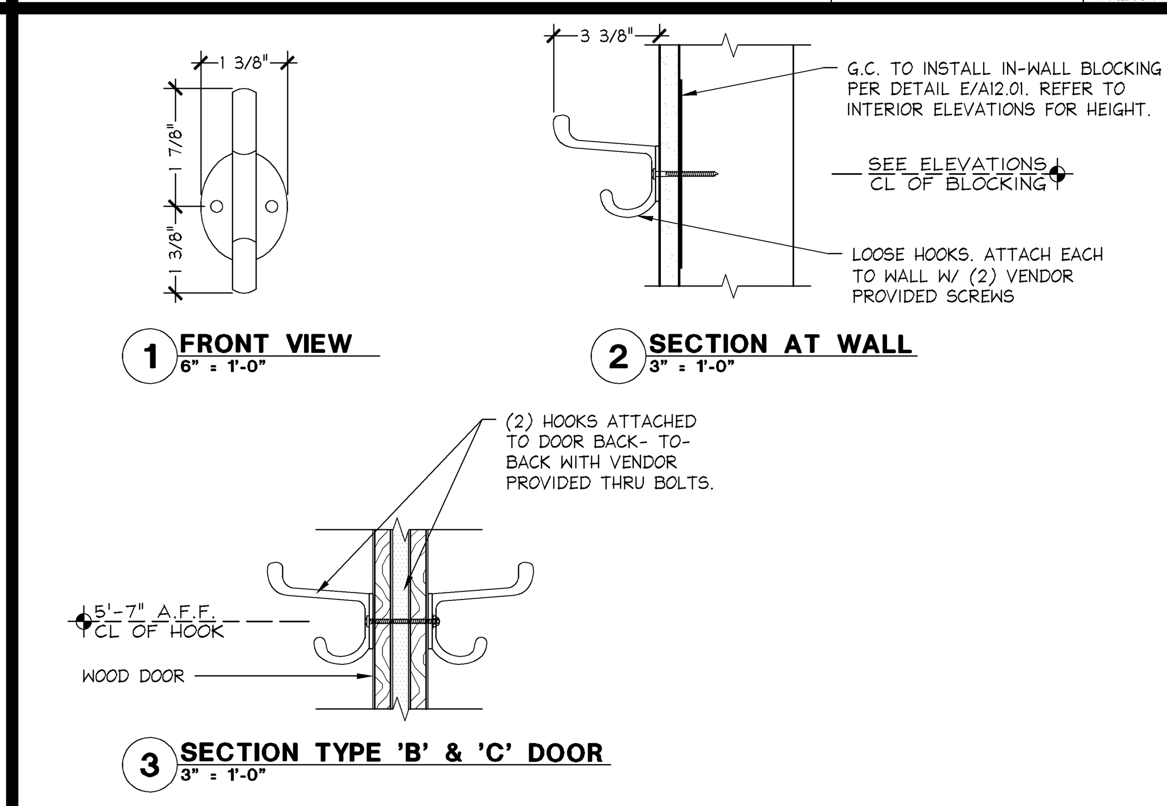

PINK FITTING ROOM HOOK DETAIL

3" = 1'-0" | 05D-A1009-K00-DETL | K | 08.23.13

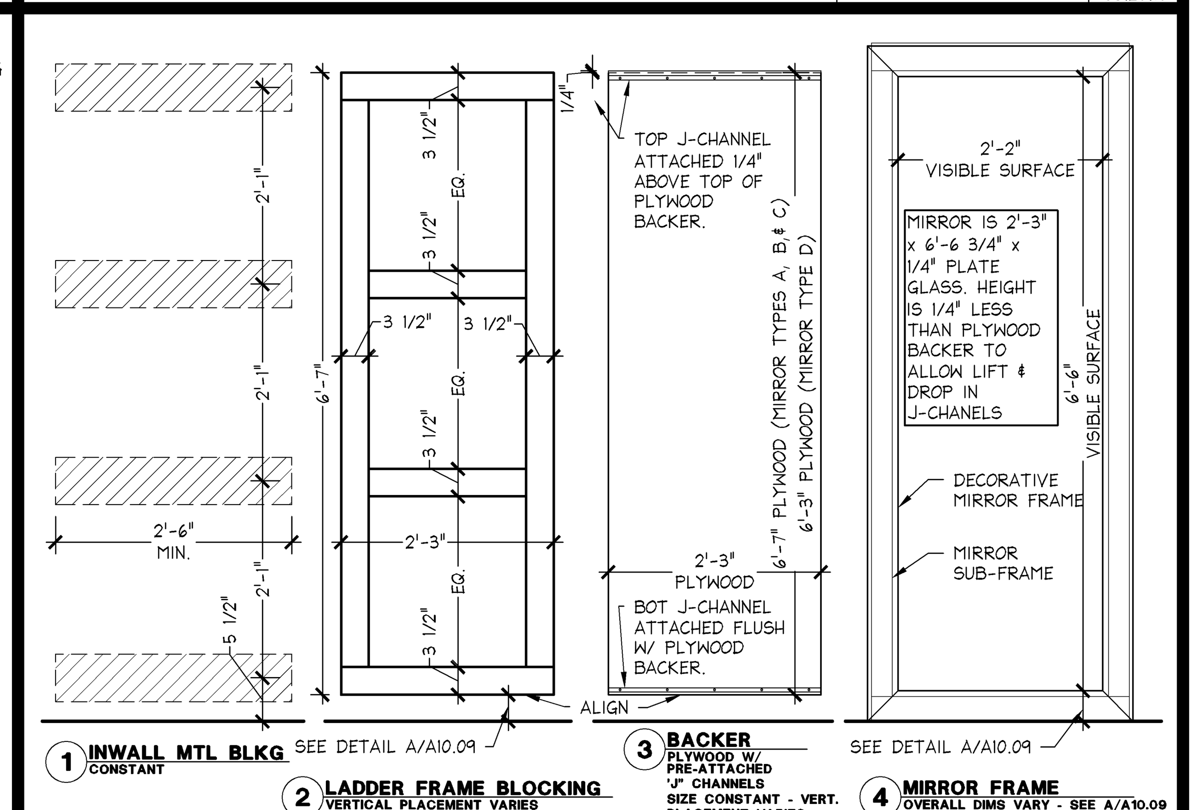

PINK FITTING ROOM MIRROR INSTALLTION LAYERS

3/4" = 1'-0" | 05D-A1009-F00-DETL | F | 08.23.13

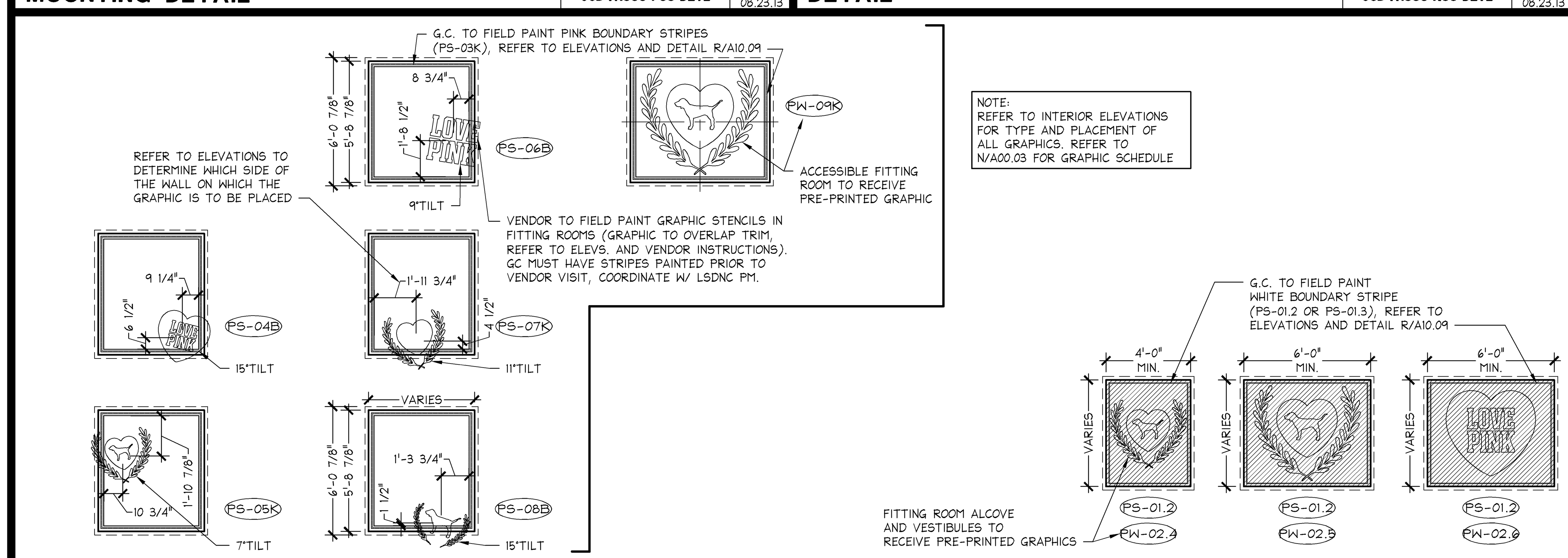

PINK WALLCOVERING GRAPHICS (PKGA)

NO SCALE | 05N-A1009-J00-NOTE | J | 04.04.14

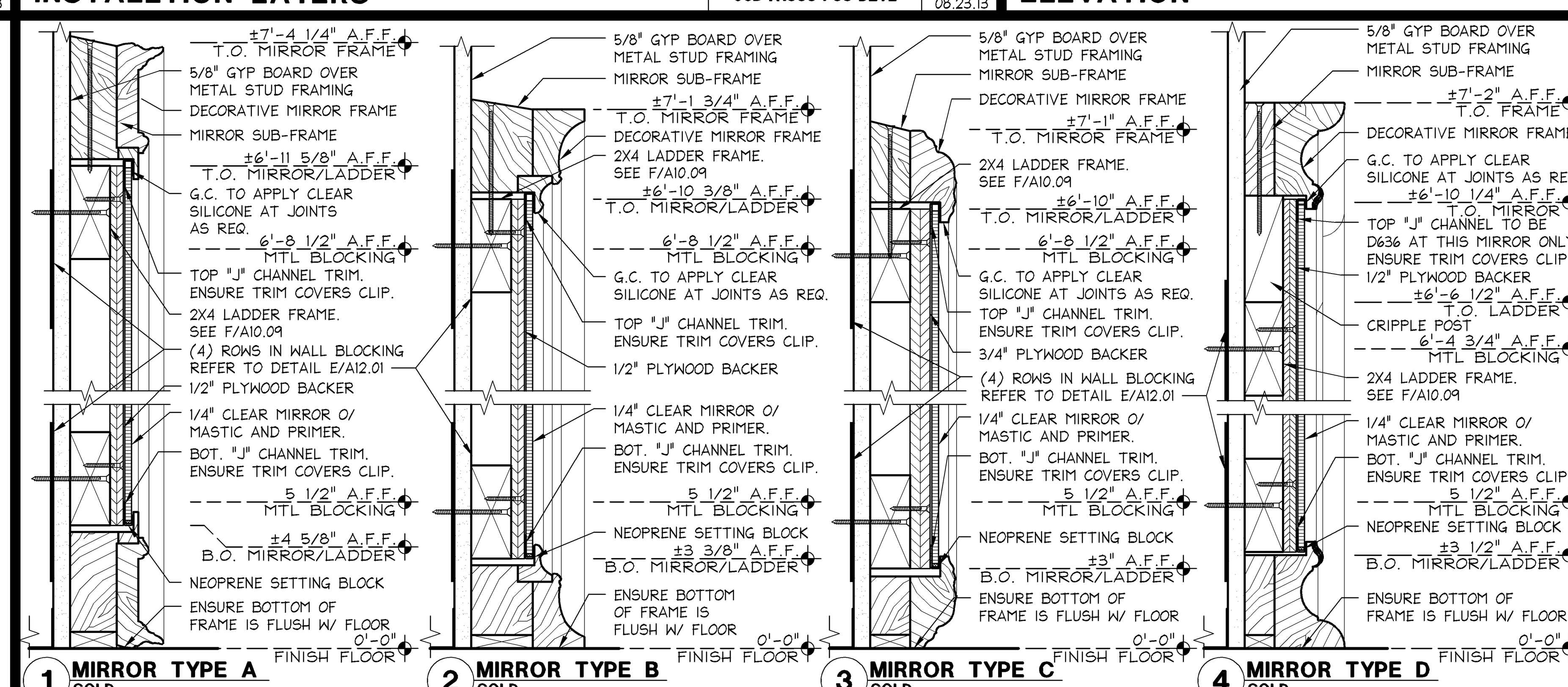

LADDER FRAME, PLYWOOD BACKER W/ "J" CHANNELS, MIRROR SUB-FRAME, AND DECORATIVE MIRROR FRAME ARE PROVIDED BY OWNER, INSTALLED BY G.C.
MIRROR GLASS, MASTIC AND PRIMER, AND FASTENERS ARE PROVIDED AND INSTALLED BY G.C.

LADDER FRAME TO BE ATTACHED TO IN-WALL BLOCKING W/ #6 X 3" F/H WOOD TO METAL "S-12" BUILDEX SCREWS @ 24" O.C. MAX (HORIZ.)
PLYWOOD BACKER TO BE ATTACHED TO LADDER FRAME W/ #6 X 1 1/2" F/H WOOD SCREWS @12" O.C. MAX (HORIZ.)
MIRROR SUB-FRAME TO BE ATTACHED TO LADDER FRAME W/ #6 X 5" PANCAKE HEAD WOOD SCREWS IN PRE-DRILLED HOLES @ 36" O.C. MAX AROUND TOP AND SIDES.

IF NOT EXISTING, G.C. TO PROVIDE SOLID FILLER AT EA. END OF BOTTOM TO FILL HOLE. PAINT TO MATCH SUB-FRAME.

REFER TO SPECIFICATIONS SECTION 088300 FOR ALL MIRROR INSTALLATION REQUIREMENTS.

TOP "J" CHANNEL TRIMS TO BE C.R. LAURENCE D645P OR EQUAL
BOTTOM "J" CHANNEL TRIMS TO BE C.R. LAURENCE D636P OR EQUAL
"J" CHANNELS ARE PRE-ATTACHED TO PLYWOOD BACKER BY VENDOR W #6 WOOD SCREWS @ 6" O.C. MAX

NOTE:
SECTION THROUGH SIDE (HORIZONTAL) OF EACH MIRROR FRAME IS SIMILAR TO TOP, WITH THE EXCEPTION THAT THERE IS NO "J" CHANNEL AND SUB-FRAME IS NOT ANGLED.

PINK FITTING ROOM MIRROR SECTIONS

3" = 1'-0" | 05D-A1009-A00-DETL | A | 12.13.13

GreenbergFarrow
1430 West Peachtree Street NW
Suite 200
Atlanta, GA 30309
t: 404 601 4000 f: 404 601 3970

Limitedbrands
LIMITED STORE PLANNING, INC.
d/b/a STORE DESIGN & CONSTRUCTION
Three Limited Parkway · Columbus, Ohio 43230
Telephone: 614.415.7000 · Fax: 614.415.7349

PROHIBITION ON REUSE: THESE DRAWINGS AND SPECIFICATIONS WERE PREPARED FOR USE ON A SPECIFIC SITE CONTEMPORANEOUSLY WITH THEIR ISSUE DATE. THEY ARE NOT INTENDED FOR USE ON A DIFFERENT PROJECT SITE OR AT A LATER TIME. REUSE OF THESE DRAWINGS AND SPECIFICATIONS, OR ANY REPRODUCTION THEREOF, ON ANOTHER PROJECT IS PROHIBITED AND CONTRARY TO LAW UNLESS EXPRESSLY AUTHORIZED IN WRITING BY LIMITED STORE PLANNING, INC., D/B/A LIMITED STORE DESIGN AND CONSTRUCTION ("LSDC").
THESE DRAWINGS AND SPECIFICATIONS ARE THE PROPERTY OF LSDC AND SHALL NOT BE DISPLAYED IN ANY MANNER OR USED ON ANY OTHER PROJECT EXCEPT BY WRITTEN AGREEMENT WITH LSDC. NO REPRODUCTION OF THESE DRAWINGS AND SPECIFICATIONS SHALL BE MADE WITHOUT THE WRITTEN AUTHORIZATION OF THE LSDC. ALL ORIGINALS OR REPRODUCTIONS OF THESE DRAWINGS AND SPECIFICATIONS MUST BE RETURNED TO LSDC UPON COMPLETION OF THEIR INTENDED USE, UNLESS OTHERWISE AGREED BY THE LSDC.
COPYRIGHT NOTICE: THESE DRAWINGS AND SPECIFICATIONS ARE COPYRIGHTED AND SUBJECT TO COPYRIGHT PROTECTION AS AN "ARCHITECTURAL WORK" UNDER SEC. 102 OF THE COPYRIGHT ACT, 17 U.S.C. AS AMENDED DECEMBER 1990, KNOWN AS THE ARCHITECTURAL WORKS COPYRIGHT PROTECTION ACT OF 1990. THE PROTECTION INCLUDES, WITHOUT LIMITATION, THE OVERALL FORM, ARRANGEMENT AND COMPOSITION OF SPACES, AND ELEMENTS OF THE DESIGN. UNDER SUCH PROTECTION, UNAUTHORIZED USE OF THESE DRAWINGS AND SPECIFICATIONS MAY RESULT IN CESSATION OF CONSTRUCTION, BUILDING SEIZURE, AND/OR MONETARY LIABILITY.

PROJECT INFORMATION:

010501726
PINK VICTORIA'S SECRET
FAYETTE MALL
3401 NICHOLASVILLE RD
SPACE # I-904
LEXINGTON, KY 40503

SCOPE:	NEW	PACKAGE: A
DESIGN TYPE:	PINK	GENERATION: 151Sa
LSD&C PROJECT #:	00062007	A/E PROJECT #: 20140534

REVISIONS:

REQUIRED BY: DATE

ELITE CONSTRUCTION GROUP
LAKE JACKSON, TX
PHONE: 979-285-0712
NOTE: THESE PRINTS HAVE BEEN REDUCED BY 50 PERCENT. SCALE WILL BE 50 PERCENT OF WHAT IS NOTED ON PLANS

DATE ISSUED:	09-05-2014
DESIGNED BY:	APL
DRAWN BY:	AS
CHECKED BY:	AJD

PINK FITTING ROOM DETAILS

DRAWING NUMBER:
A10.09